CERTUSS

STEAM GENERATOR

UMX U1500MX – U2000MX

[FACTSHEET]

www.certuss.com

CERTUSS

UMX

UMX PERFORMANCE

The UMX on-demand steam generator is completely newly developed and is designed for use with NG or LPG or both (dual gas). The system is ready for operation just 3 to 5 minutes after start-up and allows for continuous modulation between 20% and 100% output. NOx emissions remain well below the required regulations. With its high efficiency, environmental compatibility, and user-friendly operation, the UMX sets new standards in its class.

UMX FEATURES

In the new UMX model series, features that were previously optional are now included as standard. Components such as the water pump, sliding gate valve, hot water filter, gas filter and steam separator are fully integrated and pre-installed – making the CERTUSS UMX ready for immediate use. An integrated maintenance chain block hoist, a practical access ladder, and improved service access ensure greater safety and efficiency during maintenance work. The 7-inch display enables convenient operation control – also via connection to a central building management system. Thanks to the innovative One View Control, the device status remains visible at all times – even remotely.

CAPACITIES

Model UMX		1500	1800	2000
Steam output	kg/h	1500	1800	2000
Heat output*	kW	984	1181	1312
Firing rate				
(max. / 100 %)	kW	1091	1309	1454
(min. / 20 %)	kW	218	262	291
Modulation	%		20 – 100 % (1:5)	

*according to 100 °C feed water temperature and 1,0 Mpa (10 bar) steam pressure

UMX WILL FEATURE AND INCLUDE:

_Fastest start-up < 5 minutes
_Full modulation 20% – 100%
_NG or LPG or dual gas (NG/LPG)
_NOx emissions well below required standards
_7-inch display (HMI)
_Water pump
_Sliding gate valve
_Hot water filter
_Gas filter
_Steam separator
_Chain block hoist and ladder for maintenance

STEAM PRESSURE RATING

Model UMX		1500	1800	2000
Max. permissible overpressure	**MPa**		**1,0 – 3,2**	
	bar		10 – 32	
Max. operating pressure	**MPa**		**0,6 / 0,8 – 2,9**	
	bar		6 / 8 – 29	
Min. operating pressure	**MPA**		**0,6**	
	bar		6	

EFFICIENCIES

Model UMX		1500	1800	2000
Fuel-to-Steam-Efficiency	%		> 91 %	

CERTUSS

UMX

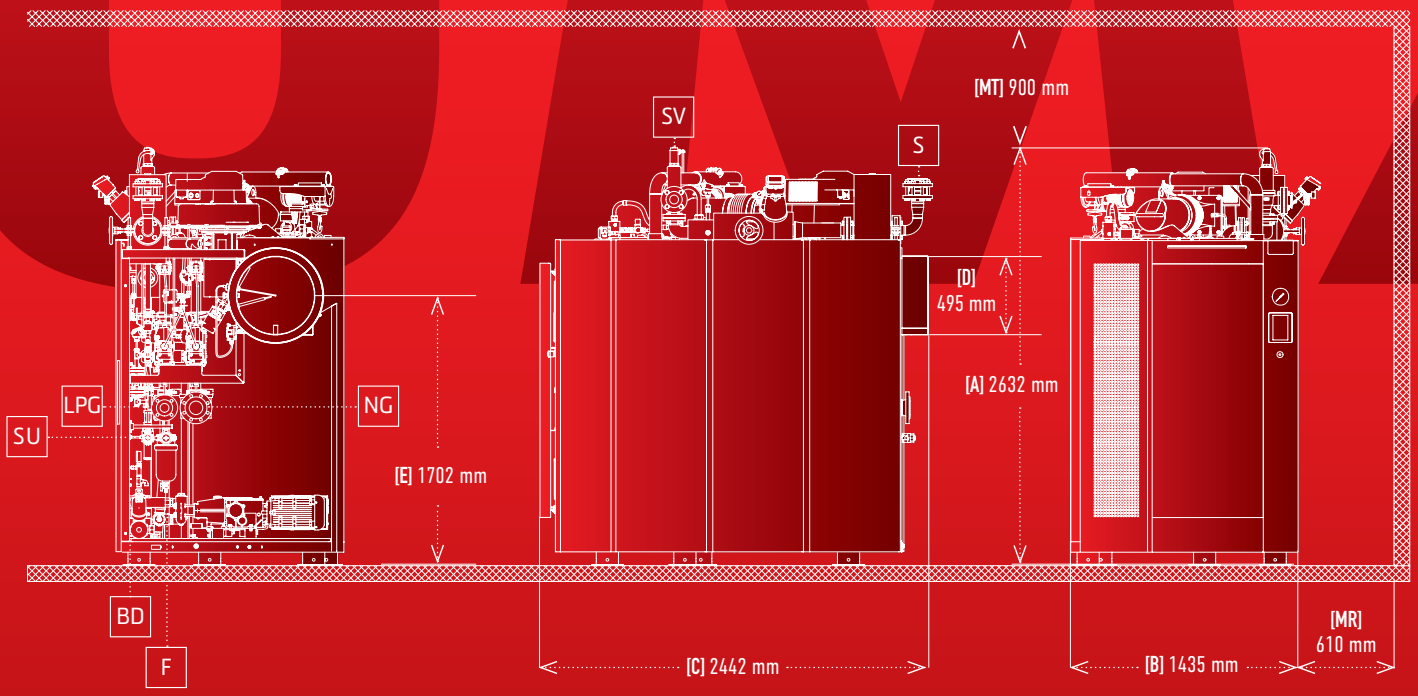

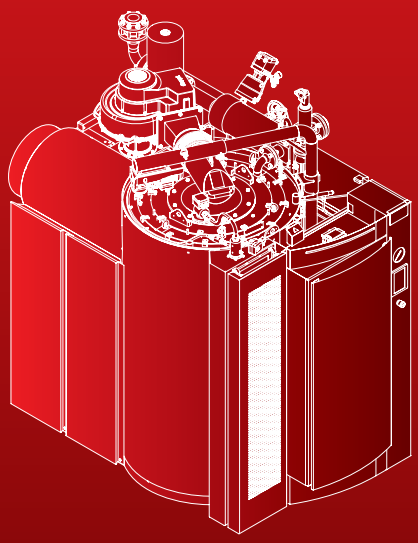

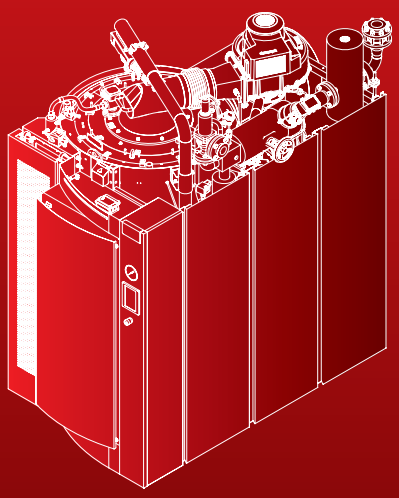

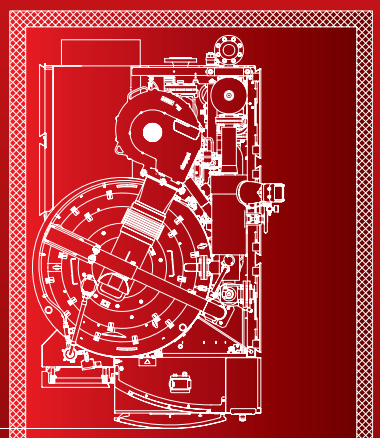

[MF] 610 mm

Footprint including maintenance area
6,3 m²

DIMENSIONS

Model UMX		1500	1800	2000
Height (A)	mm		2632	
Width (B)	mm		1435	
Depth (C)	mm		2442	
Flue gas pipe Ø (D)	mm		500	
Flue gas center (E)	mm		1702	
Footprint	m^2		3,5	
Dry weight	kg		2400	
Operating weight	kg		2625	

CONNECTIONS

Model UMX		1500	1800	2000
Steam (S)	DN		65	
Feedwater (F)	DN		1¼"	
Start Up (SU)	DN		1"	
Blowdown (BD)	DN		25	
Safety Valve (Inlet x Outlet) (SV)	DN		32 x 50	
Natural Gas Train (NG)	DN		80	
LP Gas Train (LPG)	DN		50	
Compressed Air	DN		¼"	
Condensate line (steam separator)	DN		½"	
Drip line	DN		½"	
Chimney draught	kPa		0,005 – 0,025	

MAINTENANCE AREA

Model UMX		1500	1800	2000
Right* (MR)	mm		610	
Front* (MF)	mm		610	
Left**	mm		0	
Back**	mm		0	
Top (MT)	mm		900	
Footprint including maintenance area	m^2		6,3	

* Local requirements can vary and need to be considered
**Steam generator can be placed on the left side and the back directly to the wall

A	Height
B	Width
C	Depth
D	Flue Gas Pipe Ø
E	Flue Gas Center
S	Steam
F	Feedwater
SU	Start Up
BD	Blowdown
SV	Safety Valve
NG	Natural Gas Train
LPG	LP Gas Train
MR	Maintenance Right
MF	Maintenance Front
MT	Maintenance Top

CERTUSS

COMBUSTION SPECIFICATIONS

Model UMX		1500	1800	2000
Natural Gas				
Fuel volume flow				
(max. / 100 %)	Nm³/h	109,1	130,9	145,4
(min. / 20 %)	Nm³/h	21,8	26,2	29,1
Gas flow pressure (min. / max)	mbar		30 / 100	
Combustion air volume flow*				
(max. / 100 %)	Nm³/h	1374	1649	1832
(min. / 20 %)	Nm³/h	275	330	366
Flue gas volume flow (dry)*				
(max. / 100 %)	Nm³/h	1264	1517	1685
(min. / 20 %)	Nm³/h	253	303	337
Flue gas mass flow*				
(max. / 100 %)	Nm³/h	1264	1517	1685
(min. / 20 %)	Nm³/h	253	303	337
Liquefied Petroleum Gas (Propane)				
Fuel volume flow				
(max. / 100 %)	Nm³/h	42,3	50,7	56,4
(min. / 20 %)	Nm³/h	8,5	10,1	11,3
Gas pressure (min. / max)	mbar		50	
Combustion air volume flow*				
(max. / 100 %)	Nm³/h	1281	1537	1707
(min. / 20 %)	Nm³/h	256	307	341
Flue gas volume flow (dry)*				
(max. / 100 %)	Nm³/h	1196	1435	1594
(min. / 20 %)	Nm³/h	239	287	319
Flue gas mass flow*				
(max. / 100 %)	kg/s	0,4821	0,5784	0,6425
(min. / 20 %)	kg/s	0,0964	0,1157	0,1285
*based on 4.5% O2				

CATEGORIZATION

Model UMX		1500	1800	2000
Inspection responsibility accord. to BetrSichV			4	
Category according to PED			up to 13 bar III / 16 – 32 bar IV	
Volume steam pressure system	ltr.		225	
Max. permissible overpressure	bar		10 – 32	
Pressure-liter product	ltr.bar		2250,0 – 7200,0	

ELECTRICAL REQUIREMENTS

Model UMX		1500	1800	2000
Voltage	V		380 · 400 · 415 · 440 · 460 · 480	
Frequency	Hz		50 · 60	
Electrical connection load	kVA		–	
Short-Circuit Currend Rating	kA		5	
Protection class fan			IP54	
Protection class cooling unit			IP34	

EMISSIONS

Model UMX		1500	1800	2000
NOx Natural Gas*	ppm		**25** (4.5%)	
			13 (5.5%)	
			6 (6.5%)	
			2 (7.5%)	
NOx LPG (Propane)	ppm		**40** (5.5%)	
			13 (6.5%)	
			8 (7.5%)	
*corrected to 3 % O2				

PRESSURE VESSEL

Model UMX		1500	1800	2000
Material			**P235GH**	
Water content	l		**225,0**	
Heating surface	m^2		**30,7**	

STANDARD

_Integrated PLC with 7-inch display (HMI)
_Short heat-up time (fastest start-up < 5 minutes)
_Thermotimat PLUS (extended automatic mode)
_Valve Proving System (VPS)
_Water pump
_Energy-saving variable speed combustion air fan
_Pre-Heating of combustion air (no insulation needed)
_Fully modulating 5:1 turndown burner
_High pressure limiter
_Steam- and exhaust temperature limiter
_Combustion air intake filter
_Gas filter
_Water filter
_Steam separator
_Chain block hoist and ladder for maintenance
_PPE anchor point
_One View Control

OPTIONS

_Dual Gas (NG or LPG)
_Equipment for external combustion air inlet
_Second water pump
_Second safety valve
_Cabinet cooling unit
_Remote service and online report and maintenance options
_Customer gateways-protocols: Modbus TCP, Modubus RTU, Profibus DP, Profinet IO, Ethernet IP, EtherCat, BACnetIP, BACnetMSTP, OPC UA, MQTT
_Signal interface: digital/analog

APPROVALS

_PED 2014/68/EU
_EN 676
_EN 12952
_EN 50156-1

UMX

CERTUSS

Sales & Engineering
Tel.: +49-2151-578-100
Fax: +49-2151-578-241
E-mail: verkauf@certuss.com

Service
Tel.: +49-2151-578-123
Fax: +49-2151-578-251
E-mail: service@certuss.com

CERTUSS GmbH
Hafenstraße 65
47809 Krefeld
Germany
www.certuss.com

29.044.02.2926.01 **GB** 12.10.2026